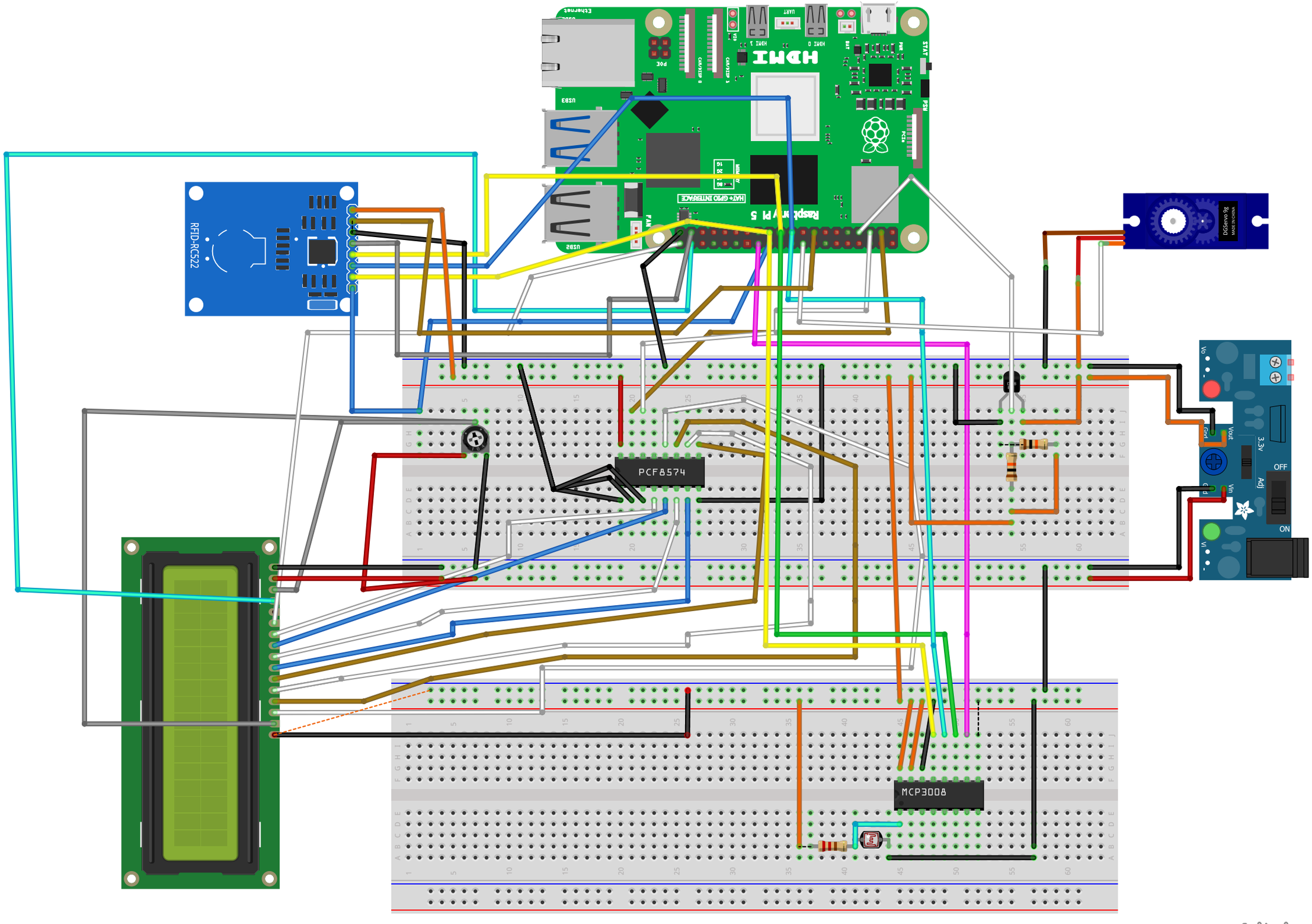
RFID-RC522
PCF8574
MCP3008
DGServo 9g
MADE IN CHINA
Vo
Gnd
Vout
3.3v
Adj
Vin
OFF
ON
Vi
HDMI
HAT+ GPIO INTERFACE
Raspberry Pi 5
USB3
USB2
Ethernet
PSU
PWR
STAT
UART
HDMI 1
HDMI 0
CAMERA 1
CAMERA 0
PoE
FAN

fritzing